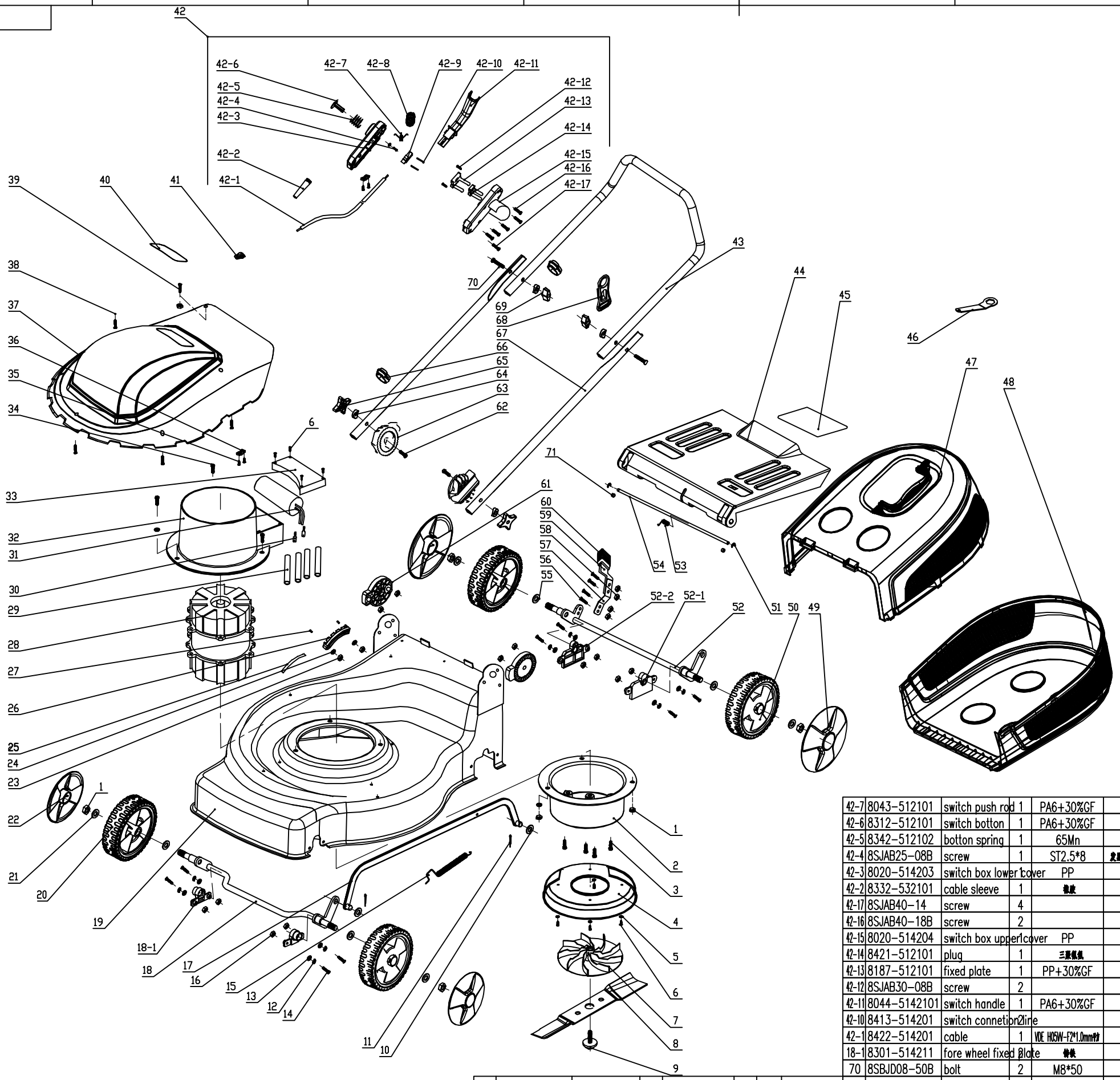

序号	代号	名称	数量	材料	单件重量	总计重量	备注
64	8341-514205	plastic washer	4	PP			
63	8147-514202	regulating braking ring	2	PA6+30%GF			
62	8SFDD08-55B	screw	2	M8*55			
61	8147-514201	fixed braking ring	2	PA6+30%GF			
60	9002-514211	plastic handle	1	PP黑色(黑色)			
59	8001-514256	handle	1	A3			
58	8NG-05B	nut	4				
57	8321-514244	spring	1	65Mn			
56	8SJAD05-14B	screw	4				
55	9WF-10B	washer	4				
54	8081-514202	rear cover shaft	1	Q235A			
53	8342-514203	rear cover spring	1	65Mn			
52	8440-514207	rear wheel shaft module	1				
51	8CE-07	E type retaining ring	2				
50	8121-514200	rear wheel module	2				
49	8021-514201	rear wheel cover	2	ABS			
48	8020-514205	connection lower cover	1	PP			
47	8020-514206	connection upper cover	1	PP 含配手			
46	8261-512101	spanner	1				
45	8162-514202	warning lable	1	PVC不干胶			
44	8020-514202	iron rear cover	1	A3烤漆漆			
43	8001-514202SB	upper handle	1	电焊钢管(镀蓝)			
42	8440-514201	switch box assembly	1				
41	8332-514201	cable sleeve	1	橡胶			
40	8162-514201	lable	1	PVC不干胶			
39	9SJAD04-16B	screw	1	M4*16			
38	8SJAB40-14	screw	4				
37	8020-514201	top cover	1	PP			
36	8184-302201	cable clamp plate	2	PP+30%GF			
35	8SJAB40-12B	screw	4				
34	8SACD08-20B	screw	3	M8*20			
33	8187-514202	capacitor cover	1	PP			
32	8024-514201	ventilating cover	1	PP			
31	8416-514201	capacitor	1	25μF			
30	9410-000001	terminal	2				
29	8G-06	heating shrink tube	1				
28	8401-514201	motor	1				
27	8SACD04-16B	screw	2	M4*16			
26	8187-514215	scale plate	1	PA6+30GF			
25	8162-514204	scale mark	1	黑底白字			
24	8WF-04B	washer	3				
23	8NG-04B	nut	3	M4			
22	8021-514202	fore wheel cover	2	PP			
21	8WF-08B-1802	washer ring	7				
20	8121-514215	fore wheel	2				
19	8006-514201	plate	1	A3			
18	8440-514202	fore wheel support module	1				
17	8440-514204	connetion assembly	1				
16	9NA-05B	nut	8				
15	8342-514201	spring	1	65MN			
14	8SJAD05-20B	screw	8	M5X20			
13	9WS-05B	washer	8				
12	8WF-05B	washer ring	8				
11	8PA25-25	fore lock	2				
10	8WF-12B-2301	washer ring	2				
9	8206-514201	bolt	1	PA6+30%GF	单件26.5		
8	8231-514201	blade	1	65Mn			
7	8403-514201	fan	1	PA6+30%GF			
6	8SJAB30-14	screw	8				
5	8WF-03B	washer ring	5	φ3.4×φ7×0.5镀镍蓝			
4	8024-514202	fan cover	1	PP			
3	8SACD08-16	screw	4	M8*16 镀蓝			
2	8187-514201	fixed plate for motor	1	PP+30%GF 本色			
1	8NG-08D	nut	1	M8 镀白锌			

序号	代号	名称	数量	材料	单件重量	总计重量	备注
71	9331-514201	rubber sleeve	2	橡胶			
52-2	8301-514213	rear wheel right fixed plate	1	特铁			
52-1	8301-514212	rear wheel left fixed plate	1	特铁			
42-9	8042-512101	switch	1	DZKA-510(10)A250VAC 5E4			
42-8	8342-512101	trigger spring	1	65Mn			

序号	代号	名称	数量	材料	单件重量	总计重量	备注
42-7	8043-512101	switch push rod	1	PA6+30%GF			
42-6	8312-512101	switch botton	1	PA6+30%GF			
42-5	8342-512102	botton spring	1	65Mn			
42-4	8SJAB25-08B	screw	1	ST2.5*8 镀蓝			
42-3	8020-514203	switch box lower cover	1	PP			
42-2	8332-532101	cable sleeve	1	橡胶			
42-17	8SJAB40-14	screw	4				
42-16	8SJAB40-18B	screw	2				
42-15	8020-514204	switch box upper cover	1	PP			
42-14	8421-512101	plug	1	三孔插头			
42-13	8187-512101	fixed plate	1	PP+30%GF			
42-12	8SJAB30-08B	screw	2				
42-11	8044-5142101	switch handle	1	PA6+30%GF			
42-10	8413-514201	switch connetion	2	line			
42-1	8422-514201	cable	1	VDE H05W-F2*1.0mm特			
18-1	8301-514211	fore wheel fixed plate	2	特铁			
70	8SBJD08-50B	bolt	2	M8*50			
69	8313-514101	knob	2	ABS			
68	8343-512101	hook	1	PA6+30%GF			
67	8001-514203SB	lower handle	2	电焊钢管			
66	8204-512101	wire hook	2	PA6			
65	9609-915101	knob assembly	2	ABS			

exploding drawing

YT5142

PDF 文件使用 "pdfFactory Pro" 试用版本创建 www.fineprint.com.cn